Note: This Drawing is the property of Kapil Enterprises-Kundli, and must not be copied or reproduced without permission or Written authorisation by Kapil Enterprises-Kundli

All Dimension is in mm

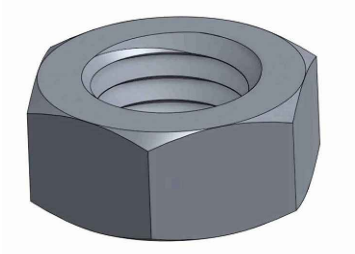

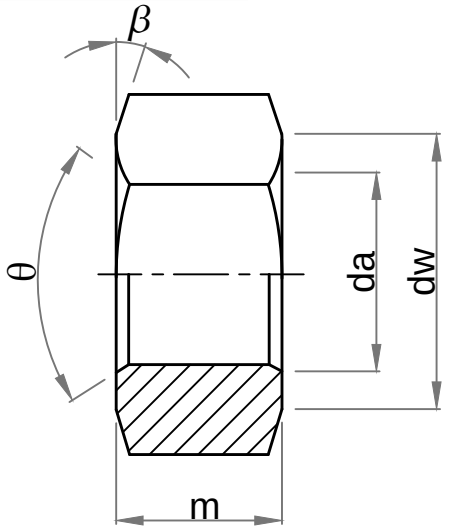

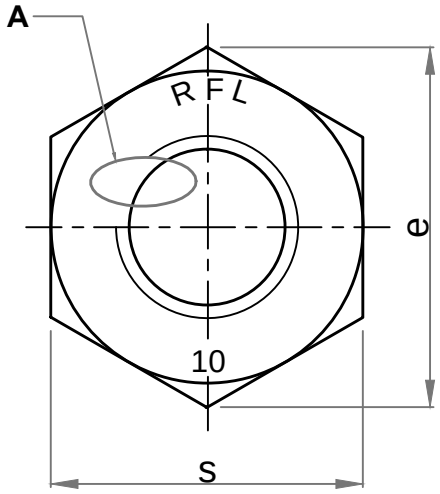

β = 15° to 30°
θ= 90° to 120°

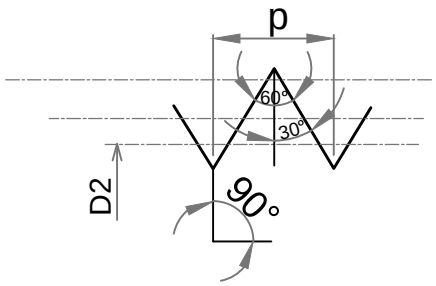

Hex Nut EN ISO 4032 (DIN 934) M-56

'A' Enlarge View

Parameters	Symbol	Minimum	Maximum
Width A/F	s	82.80	85.00
Width A/C	e	93.56	-
da	da	56.00	60.50
dw	dw	78.70	-
Thickness	m	43.40	45.00
Pitch	P	5.5 mm	
Minor diameter, Hole size before threading	D2	50.70	50.80

Amendment			
Details	Revision No.	Dated	Authorised by

Drawing No.- KE-BASE-1122-00020-4032-898.2-10-56		
Dimension as per		EN ISO 4032
Chemical & Mechanical properties as per		ISO 898-2
Grade		10
Title		Hex Nut
Size	M-56x5.5	Status- **Approved**
Dated	25.04.2018	Proj.
Mass/Weight	1.3200 kg/piece	
Drawn By Pankaj Kumar (Ass. QC Manager)	Checked By Santosh Kumar (Plant Head-GM)	Approved By Kapil Aggarwal CEO-MD

Kapil Enterprises
330 EHTP, HSIIDC, Kundli Industrial Estate
Sonepat - Haryana-131028, Ph:9811009061
Email:sales@bigboltnut.com, kapil@roll-fast.com