Note: This Drawing is the property of Kapil Enterprises-Kundli, and must not be copied or reproduced without permission or Written authorisation by Kapil Enterprises-Kundli

All Dimension is in mm

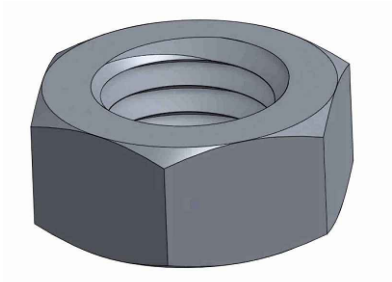

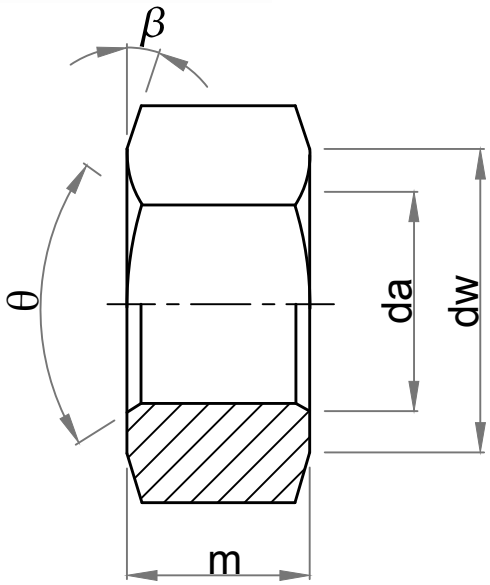

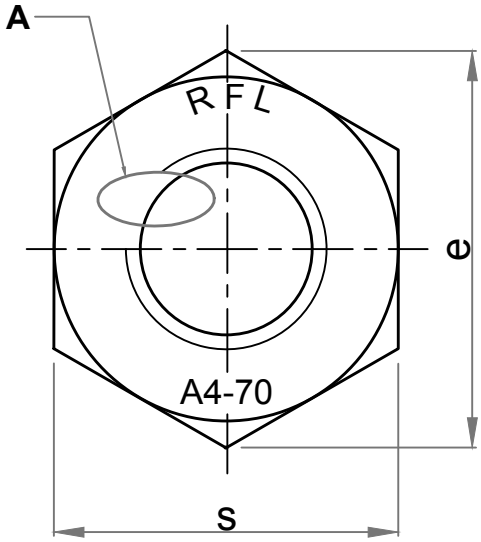

β = 15° to 30°
θ= 90° to 120°

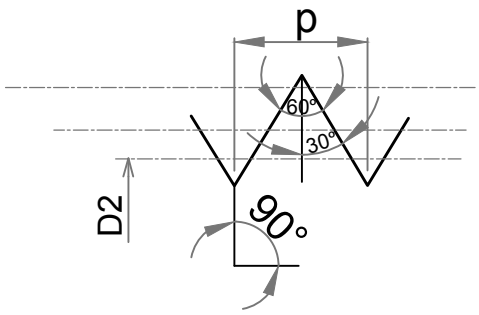

Hex Nut EN ISO 4032 (DIN 934) M-64

'A' Enlarge View

Parameters	Symbol	Minimum	Maximum
Width A/F	s	92.80	95.00
Width A/C	e	104.86	-
da	da	64.00	69.10
dw	dw	88.20	-
Thickness	m	49.10	51.00
Pitch	P	6.0 mm	
Minor diameter, Hole size before threading	D2	58.20	58.30

Amendment

Details	Revision No.	Dated	Authorised by

Drawing No.- KE-BASE-1122-00022-4032-3506-2-A4-70-64		
Dimension as per		EN ISO 4032
Chemical & Mechanical properties as per		ISO 3506-2
Grade		A4-70
Title		Hex Nut
Size	M-64x6.0	Status- **Approved**
Dated	02.06.2020	Proj.
Mass/Weight	1.8400 kg/piece	
Drawn By Pankaj Kumar (Ass. QC Manager)	Checked By Santosh Kumar (Plant Head-GM)	Approved By Kapil Aggarwal CEO-MD

Kapil Enterprises
330 EHTP, HSIIDC, Kundli Industrial Estate
Sonepat - Haryana-131028, Ph:9811009061
Email:sales@bigboltnut.com, kapil@roll-fast.com