Note: This Drawing is the property of Kapil Enterprises-Kundli, and must not be copied or reproduced without permission or Written authorisation by Kapil Enterprises-Kundli

All Dimension is in mm

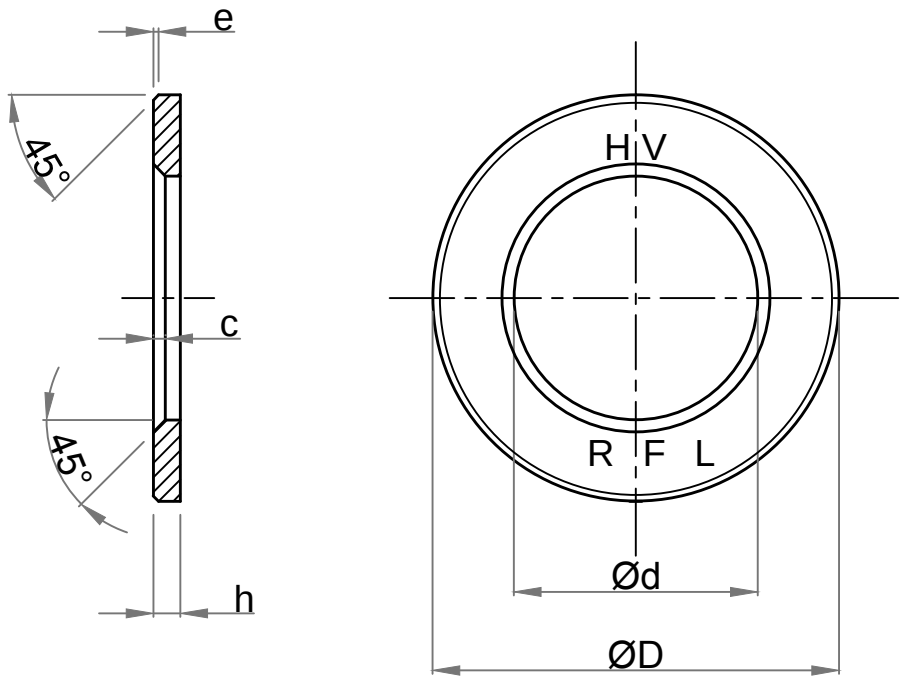

Washer DIN EN 14399-4 (DIN 6916) M-36

Parameters	Symbol	Minimum	Maximum
Outside diameter	D	64.80	66.00
Inside diameter	d	37.00	37.62
Thickness	h	5.40	6.60
Inside Chamfer	c	2.50	3.00
Outside Chamfer	e	1.25	2.50

Amendment			
Details	Revision No.	Dated	Authorised by

Drawing No.- KE-BASE-1155-00002-14399.4-HV300-10-36		
Dimension as per		DIN EN 14399-4
Chemical & Mechanical properties as per		HV 300
Grade		10
Title		Washer
Size	M-36	Status- **Approved**
Dated	30.04.2018	Proj.
Mass/Weight	0.106 kg/piece	
Drawn By Pankaj Kumar (Ass. QC Manager)	Checked By Santosh Kumar (Plant Head-GM)	Approved By Kapil Aggarwal CEO-MD

Kapil Enterprises
330 EHTP, HSIIDC, Kundli Industrial Estate
Sonepat - Haryana-131028, Ph:9811009061
Email:sales@bigboltnut.com, kapil@roll-fast.com