Note: This Drawing is the property of Kapil Enterprises-Kundli, and must not be copied or reproduced without permission or Written authorisation by Kapil Enterprises-Kundli

All Dimension is in mm

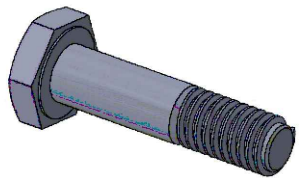

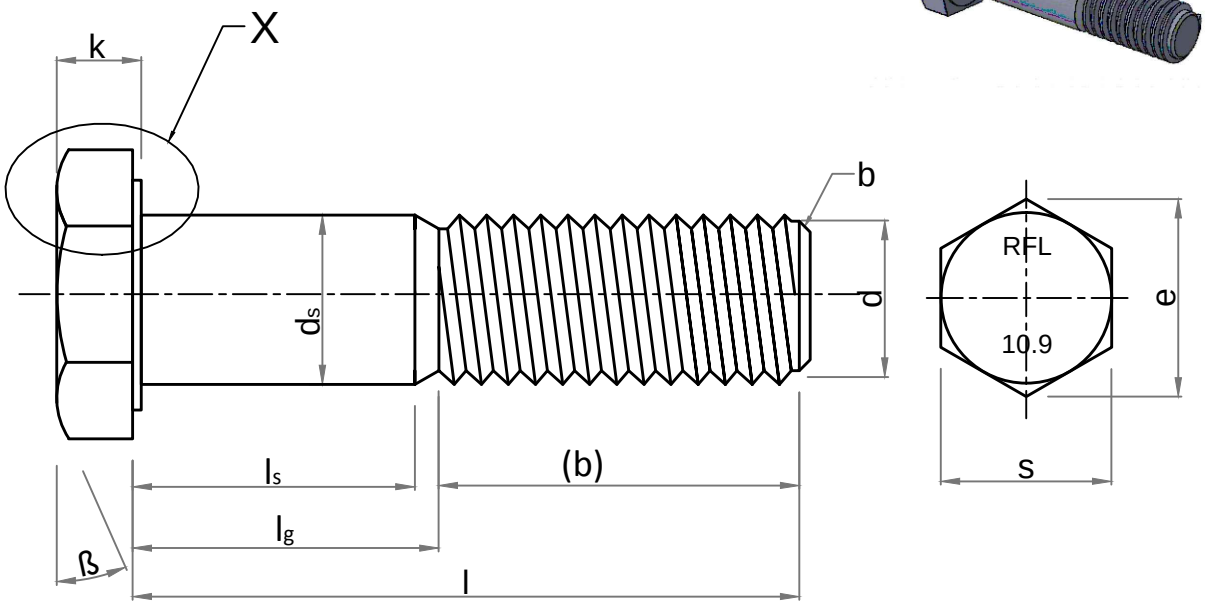


Note:
a. ß= 15° to 30°
b. Point shall be chamfered on for threads ⩽M4 may be as-rolled (sheared end) in accordance with ISO 4753.
c. Incomplete thread μ ⩽ 2P.
d. Reference datum for $d_w$.
e. Maximum underhead fillet.

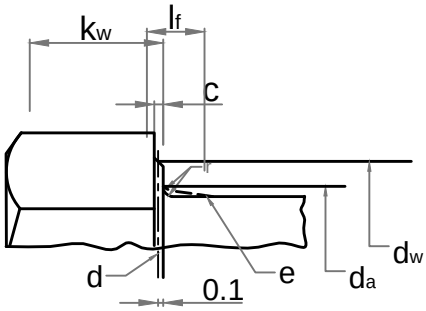


'X' Enlarge View

# Hex Bolt DIN EN 14399-4 M-64x190

| Parameters | Symbol | Minimum | Maximum |
|---|---|---|---|
| | | | |
| Raw material diameter | D | 64.50 | 65.50 |
| Head thickness | k | 38.75 | 41.25 |
| Width A/F | s | 97.80 | 100.00 |
| Width A/C | e | 110.50 | - |
| Shank diameter | ds | 62.80 | 65.20 |
| Major diameter | D | 63.32 | 63.92 |
| Pitch diameter | D1 | 59.74 | 60.02 |
| Minor diameter | D2 | - | 57.42 |
| Threading length | (b) | 100.00 | 113.00 |
| Shank length | ls | 72.00 | - |
| Total Shank length | lg | - | 90.00 |
| Total length of bolt | l | 188.00 | 192.00 |
| da | da | - | 73.20 |
| dw | dw | 92.90 | - |
| Radius of fillet | r | 4.00 | - |
| c | c | 0.50 | 1.00 |
| Chamfer | b | 0.00 | 12.00 |

| Amendment | | | |
|---|---|---|---|
| Details | Revision No. | Dated | Authorised by |
| | | | |

| | | |
|---|---|---|
| Drawing No.- | | |
| KE-BASE-1133-00102-14399.4-898.1-10.9-64x190 | | |
| Dimension as per | | DIN EN 14399-4 |
| Mechanical properties as per | | ISO 898-1 |
| Grade | | 10.9 |
| Size | | 64x190 |
| Pitch | | 6.00 |
| Title | Hex Bolt | Status- **Approved** |
| Dated | 21.04.2018 | Proj. |
| Mass/Weight | 7.090 kg/piece | |
| Drawn By Pankaj Kumar (Ass. QC Manager) | Checked By Santosh Kumar (Plant Head-GM) | Approved By Kapil Aggarwal CEO-MD |

**Kapil Enterprises**
330 EHTP, HSIIDC, Kundli Industrial Estate
Sonepat - Haryana-131028, Ph:9811009061
**Email:sales@bigboltnut.com, kapil@roll-fast.com**