Note: This Drawing is the property of Kapil Enterprises-Kundli, and must not be copied or reproduced without permission or Written authorisation by Kapil Enterprises-Kundli

All Dimension is in mm

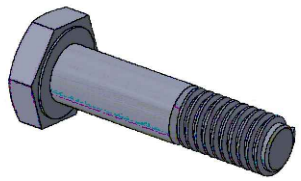

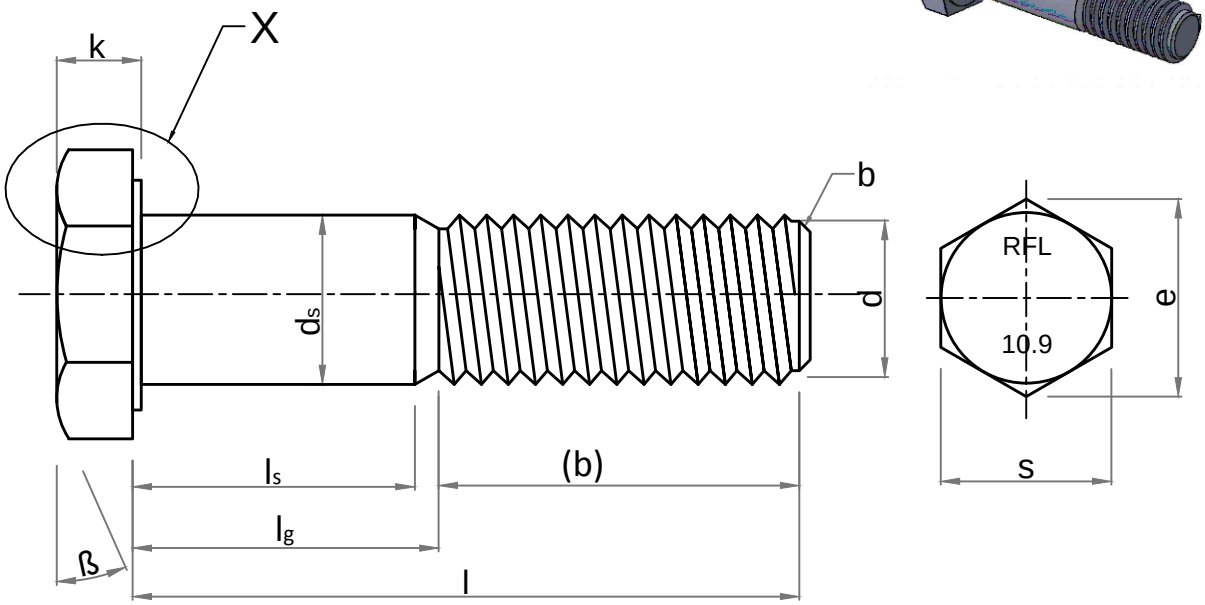

Note:
a. ß= 15° to 30°
b. Point shall be chamfered on for threads ≤ M4 may be as-rolled (sheared end) in accordance with ISO 4753.
c. Incomplete thread μ ≤ 2P.
d. Reference datum for d_w.
e. Maximum underhead fillet.

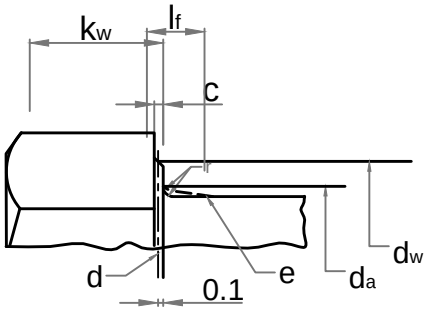

'X' Enlarge View

Hex Bolt DIN EN 14399-4 M-56x220

Parameters	Symbol	Minimum	Maximum
Raw material diameter	D	56.50	57.50
Head thickness	k	33.75	36.25
Width A/F	s	87.80	90.00
Width A/C	e	99.20	-
Shank diameter	ds	54.80	57.20
Major diameter	D	55.36	55.92
Pitch diameter	D1	52.09	52.35
Minor diameter	D2	-	49.97
Threading length	(b)	90.00	101.50
Shank length	ls	113.50	-
Total Shank length	lg	-	130.00
Total length of bolt	l	217.70	222.30
da	da	-	64.20
dw	dw	83.40	-
Radius of fillet	r	3.50	-
c	c	0.50	1.00
Chamfer	b	0.00	11.00

Amendment			
Details	Revision No.	Dated	Authorised by

Drawing No.-		
KE-BASE-1133-00093-14399.4-898.1-10.9-56x220		
Dimension as per		DIN EN 14399-4
Mechanical properties as per		ISO 898-1
Grade		10.9
Size		56x220
Pitch		5.50
Title	Hex Bolt	Status- **Approved**
Dated	21.04.2018	Proj.
Mass/Weight	5.861 kg/piece	
Drawn By Pankaj Kumar (Ass. QC Manager)	Checked By Santosh Kumar (Plant Head-GM)	Approved By Kapil Aggarwal CEO-MD

Kapil Enterprises
330 EHTP, HSIIDC, Kundli Industrial Estate
Sonepat - Haryana-131028, Ph:9811009061
Email:sales@bigboltnut.com, kapil@roll-fast.com