Note: This Drawing is the property of Kapil Enterprises-Kundli, and must not be copied or reproduced without permission or Written authorisation by Kapil Enterprises-Kundli

All Dimension is in mm

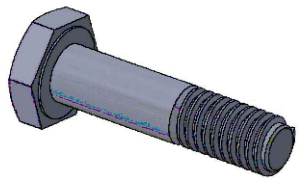

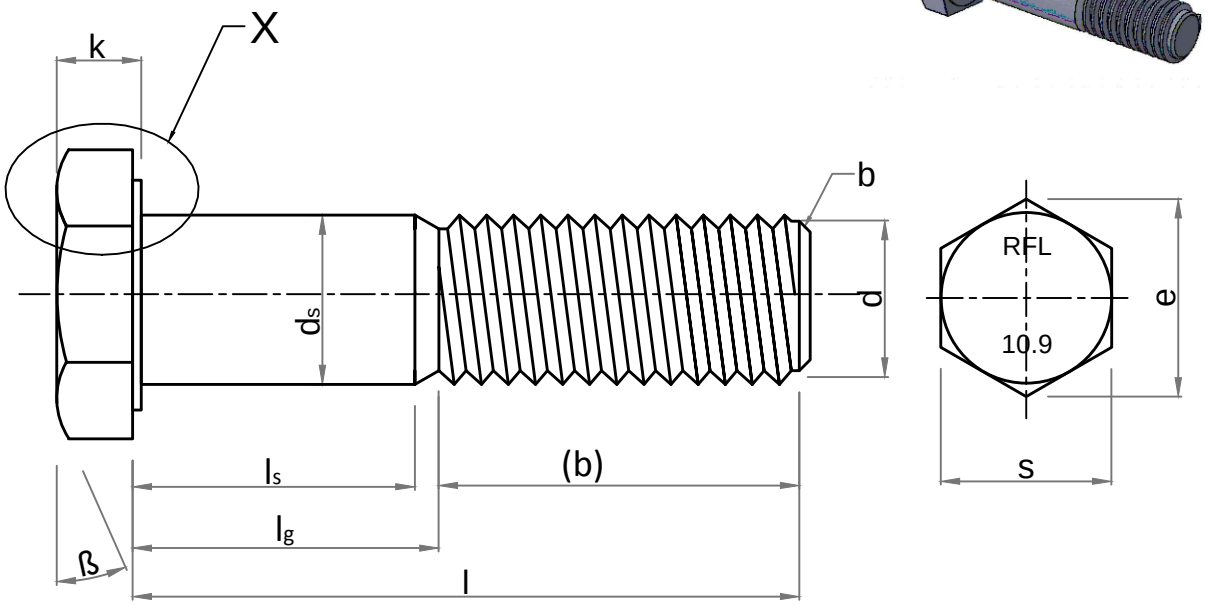

Note:
a. ß= 15° to 30°
b. Point shall be chamfered on for threads ≤ M4 may be as-rolled (sheared end) in accordance with ISO 4753.
c. Incomplete thread μ ≤ 2P.
d. Reference datum for d_w.
e. Maximum underhead fillet.

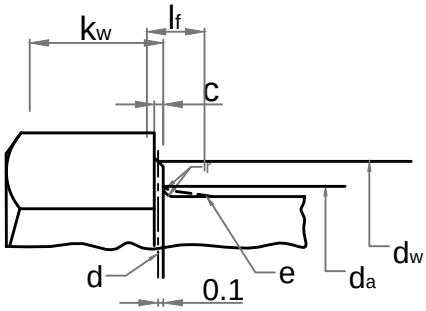

'X' Enlarge View

Hex Bolt DIN EN 14399-4 M-42x260

Parameters	Symbol	Minimum	Maximum
Raw material diameter	D	42.50	43.50
Head thickness	k	24.95	27.05
Width A/F	s	68.10	70.00
Width A/C	e	76.95	-
Shank diameter	ds	41.00	43.00
Major diameter	D	41.44	41.94
Pitch diameter	D1	38.78	39.01
Minor diameter	D2	-	37.07
Threading length	(b)	74.00	82.50
Shank length	ls	172.50	-
Total Shank length	lg	-	186.00
Total length of bolt	l	257.40	262.60
da	da	-	48.00
dw	dw	64.70	-
Radius of fillet	r	2.50	-
c	c	0.50	1.00
Chamfer	b	0.00	9.00

Amendment			
Details	Revision No.	Dated	Authorised by

Drawing No.-		
KE-BASE-1133-00058-14399.4-898.1-10.9-42x260		
Dimension as per		DIN EN 14399-4
Mechanical properties as per		ISO 898-1
Grade		10.9
Size		42x260
Pitch		4.50
Title	Hex Bolt	Status- **Approved**
Dated	18.04.2018	Proj.
Mass/Weight	3.529 kg/piece	
Drawn By Pankaj Kumar (Ass. QC Manager)	Checked By Santosh Kumar (Plant Head-GM)	Approved By Kapil Aggarwal CEO-MD

Kapil Enterprises
330 EHTP, HSIIDC, Kundli Industrial Estate
Sonepat - Haryana-131028, Ph:9811009061
Email:sales@bigboltnut.com, kapil@roll-fast.com