Note: This Drawing is the property of Kapil Enterprises-Kundli, and must not be copied or reproduced without permission or Written authorisation by Kapil Enterprises-Kundli

All Dimension is in mm

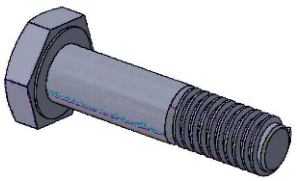

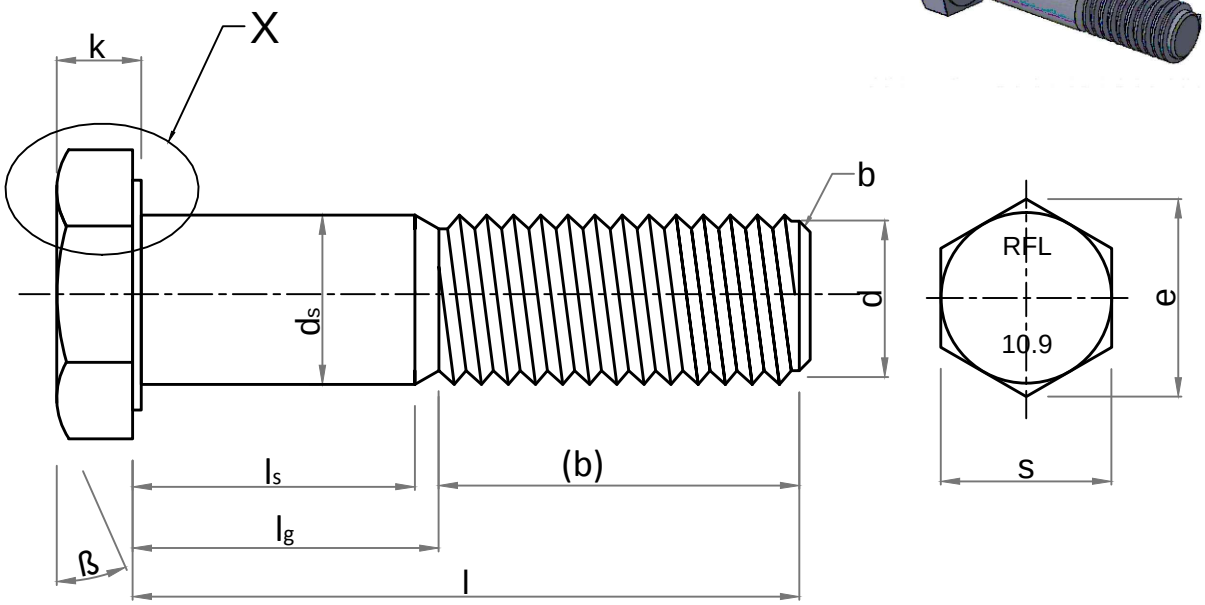

Note:
a. ß= 15° to 30°
b. Point shall be chamfered on for threads ≤ M4 may be as-rolled (sheared end) in accordance with ISO 4753.
c. Incomplete thread μ ≤ 2P.
d. Reference datum for d_w.
e. Maximum underhead fillet.

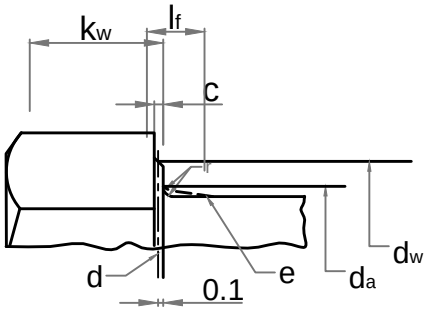

'X' Enlarge View

Hex Bolt DIN EN 14399-4 M-36x280

Parameters	Symbol	Minimum	Maximum
Raw material garde	G		
Raw material diameter	D	36.50	37.50
Head thickness	k	21.95	24.05
Width A/F	s	58.80	60.00
Width A/C	e	66.44	-
Shank diameter	ds	35.00	37.00
Major diameter	D	35.46	35.94
Pitch diameter	D1	33.12	33.34
Minor diameter	D2	-	31.61
Threading length	(b)	52.00	59.00
Shank length	ls	216.00	-
Total Shank length	lg	-	228.00
Total length of bolt	l	277.40	282.60
da	da	-	41.00
dw	dw	55.90	-
Radius of fillet	r	2.00	-
c	c	0.40	0.80
Chamfer	b	0.00	8.00

Amendment			
Details	Revision No.	Dated	Authorised by

Drawing No.-		
KE-BASE-1133-00032-14399.4-898.1-10.9-36x280		
Dimension as per		DIN EN 14399-4
Mechanical properties as per		ISO 898-1
Grade		10.9
Size		36x280
Pitch		4.00
Title	Hex Bolt	Status- **Approved**
Dated	17.04.2018	Proj.
Mass/Weight	2.703 kg/piece	
Drawn By Pankaj Kumar (Ass. QC Manager)	Checked By Santosh Kumar (Plant Head-GM)	Approved By Kapil Aggarwal CEO-MD

Kapil Enterprises
330 EHTP, HSIIDC, Kundli Industrial Estate
Sonepat - Haryana-131028, Ph:9811009061
Email:sales@bigboltnut.com, kapil@roll-fast.com