Note: This Drawing is the property of Kapil Enterprises-Kundli, and must not be copied or reproduced without permission or Written authorisation by Kapil Enterprises-Kundli

All Dimension is in mm

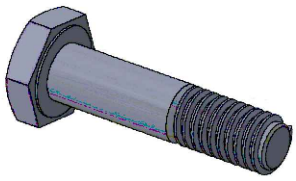

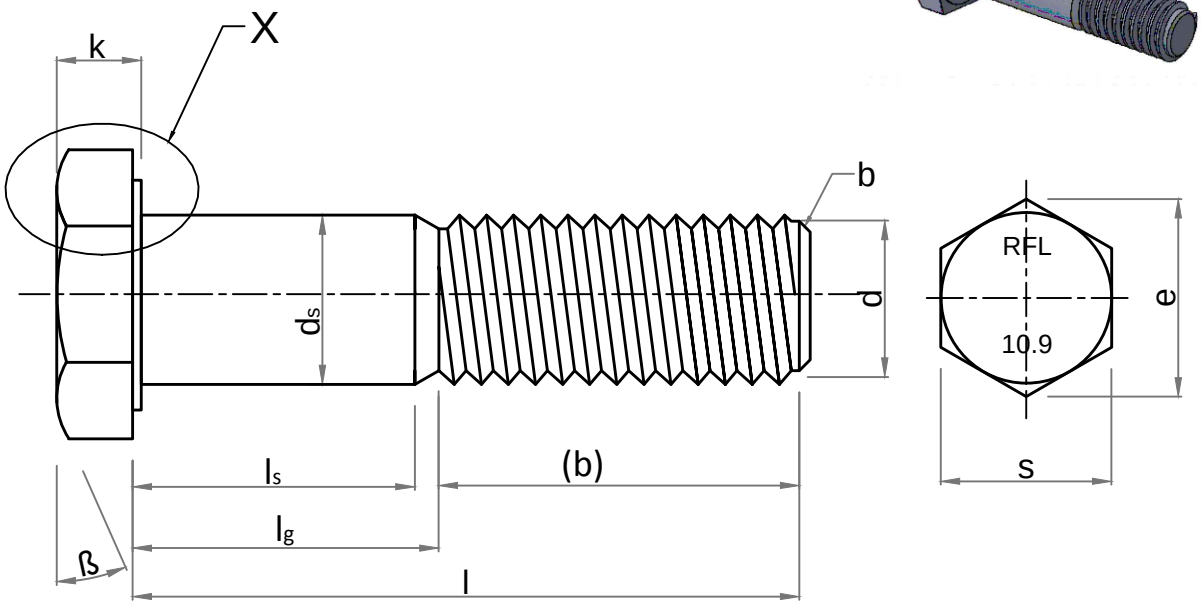

Note:
a. ß= 15° to 30°
b. Point shall be chamfered on for threads ≤ M4 may be as-rolled (sheared end) in accordance with ISO 4753.
c. Incomplete thread μ ≤ 2P.
d. Reference datum for d_w.
e. Maximum underhead fillet.

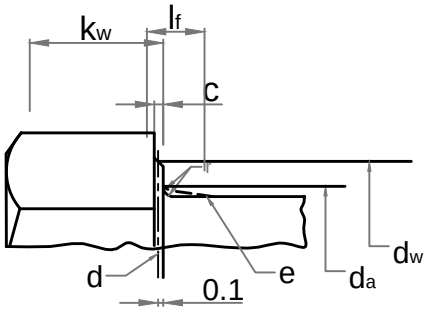

'X' Enlarge View

Hex Bolt DIN EN 14399-4 M-30x300

Parameters	Symbol	Minimum	Maximum
Raw material garde	G		
Raw material diameter	D	29.50	30.50
Head thickness	k	17.95	20.05
Width A/F	s	49.00	50.00
Width A/C	e	55.37	-
Shank diameter	ds	29.16	30.84
Major diameter	D	29.52	29.95
Pitch diameter	D1	27.46	27.67
Minor diameter	D2	-	26.16
Threading length	(b)	44.00	49.50
Shank length	ls	245.50	-
Total Shank length	lg	-	256.00
Total length of bolt	l	297.40	302.60
da	da	-	35.00
dw	dw	46.60	-
Radius of fillet	r	2.00	-
c	c	0.40	0.80
Chamfer	b	0.00	7.00

Amendment			
Details	Revision No.	Dated	Authorised by

Drawing No.-		
KE-BASE-1133-00018-14399.4-898.1-10.9-30x300		
Dimension as per		DIN EN 14399-4
Mechanical properties as per		ISO 898-1
Grade		10.9
Size		30x300
Pitch		3.50
Title	Hex Bolt	Status- **Approved**
Dated	04.04.2018	Proj.
Mass/Weight	1.920 kg/piece	
Drawn By Pankaj Kumar (Ass. QC Manager)	Checked By Santosh Kumar (Plant Head-GM)	Approved By Kapil Aggarwal CEO-MD

Kapil Enterprises
330 EHTP, HSIIDC, Kundli Industrial Estate
Sonepat - Haryana-131028, Ph:9811009061
Email:sales@bigboltnut.com, kapil@roll-fast.com